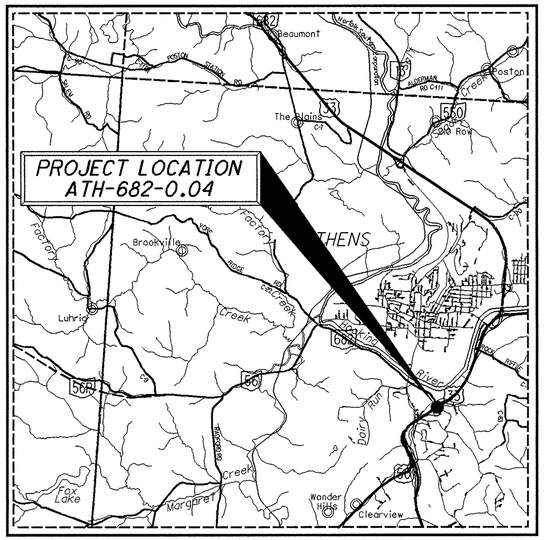


LOCATION MAP

LATITUDE: 39°18'51" LONGITUDE: 82°05'54"

SCALE IN MILES

0 1 2 3 4

PORTION TO BE IMPROVED

INTERSTATE & DIVIDED HIGHWAY

UNDIVIDED STATE & FEDERAL ROUTES

OTHER ROADS

## DESIGN DESIGNATION

| | |
|---|---|
| CURRENT ADT (2016) | 9530 |
| DESIGN YEAR ADT (2036) | 11800 |
| DESIGN HOURLY VOLUME (2033) | 1180 |
| DIRECTIONAL DISTRIBUTION | 55% |
| TRUCKS (24 HOUR B&C) | 6% |
| DESIGN SPEED | 55 MPH |
| LEGAL SPEED | 55 MPH |

DESIGN FUNCTIONAL CLASSIFICATION:
URBAN MINOR ARTERIAL

NHS PROJECT ..... NO

## DESIGN EXCEPTIONS

NONE REQUIRED

**UNDERGROUND UTILITIES**

CONTACT BOTH SERVICES
CALL TWO WORKING DAYS
**BEFORE YOU DIG**

CALL
**1-800-362-2764**
(TOLL FREE)
OHIO UTILITIES PROTECTION SERVICE
NON-MEMBERS
MUST BE CALLED DIRECTLY

OIL & GAS PRODUCERS PROTECTIVE SERVICE CALL: **1-800-925-0988**

PLAN PREPARED BY:

OHIO DEPARTMENT OF TRANSPORTATION
PLANNING & ENGINEERING DEPARTMENT
DISTRICT 10
MARIETTA, OHIO

# STATE OF OHIO
# DEPARTMENT OF TRANSPORTATION

# ATH-682-0.04

## ATHENS TOWNSHIP

## ATHENS COUNTY

INDEX OF SHEETS:


| | |
|---|---|
| TITLE | 1 |
| GENERAL NOTES & CALCULATIONS | 2 |
| GENERAL SUMMARY | 3 |
| STRUCTURES (20' AND OVER) | 4-7 |


ENGINEERS SEAL:

STATE OF OHIO
WESLEY A. BUCKLEY
E-72249
REGISTERED PROFESSIONAL ENGINEER

SIGNED: Wes Buckley
DATE: 2-3-16

| STANDARD CONSTRUCTION DRAWINGS | | | | | | | SUPPLEMENTAL SPECIFICATIONS | |
|---|---|---|---|---|---|---|---|---|
| RM-4.2 | 4-18-14 | | | | | | 800 | 4/15/16 |
| | | | | | | | 832 | 1/17/14 |
| MT-97.10 | 7-18-14 | | | | | | 847 | 7/17/15 |
| MT-98.29 | 7-19-13 | | | | | | | |
| MT-99.50 | 7-19-13 | | | | | | | |

SPECIAL PROVISIONS

### PROJECT DESCRIPTION

THIS PROJECT CONSISTS OF REMOVING AN EXISTING ASPHALT OVERLAY AND PLACING A NEW CONCRETE OVERLAY. THE PROJECT LENGTH IS 319 FEET AND THE BRIDGE LIMITS ARE 245 FEET.

PROJECT EARTH DISTURBED AREA: < 1 ACRE
ESTIMATED CONTRACTOR EARTH DISTRUBED AREA: < 1 ACRE
NOTICE OF INTENT EARTH DISTURBED AREA: < 1 ACRE
EDA < 1 ACRE - BEST MANAGEMENT PRACTICES AND NOTICE OF INTENT NOT REQUIRED

### LIMITED ACCESS

THIS IMPROVEMENT IS ESPECIALLY DESIGNED FOR THROUGH TRAFFIC AND HAS BEEN DECLARED A LIMITED ACCESS HIGHWAY OR FREEWAY BY ACTION OF THE DIRECTOR IN ACCORDANCE WITH THE PROVISIONS OF SECTION 5511.02 OF THE OHIO REVISED CODE.

### 2013 SPECIFICATIONS

THE STANDARD SPECIFICATIONS OF THE STATE OF OHIO, DEPARTMENT OF TRANSPORTATION, INCLUDING CHANGES AND SUPPLEMENTAL SPECIFICATIONS LISTED IN THE PROPOSAL SHALL GOVERN THIS IMPROVEMENT.

I HEREBY APPROVE THESE PLANS AND DECLARE THAT THE MAKING OF THIS IMPROVEMENT WILL REQUIRE THE CLOSING TO TRAFFIC OF THE HIGHWAY AND THAT DETOURS WILL BE PROVIDED AS INDICATED ON SHEET 2.

APPROVED T. Stevenson P.E.
DATE 2/8/16 DISTRICT DEPUTY DIRECTOR

APPROVED _____
DATE _____ DIRECTOR, DEPARTMENT OF TRANSPORTATION

FEDERAL PROJECT NO. E160-324

PID NO. 101875

CONSTRUCTION PROJECT NO.

RAILROAD INVOLVEMENT NONE

ATH-682-0.04

1/7

I:\project\ATH-682-00.04-PID-101875\DGN\TitleSheet.dgn 03-FEB-2016 10:48AM wbuckle1

## ITEM 614 - MAINTAINING TRAFFIC

THE CONTRACTOR SHALL MAINTAIN TRAFFIC AT ALL TIMES IN ACCORDANCE WITH THE REQUIREMENTS OF ITEM 614 AND THE CLOSURE DESCRIBED IN THESE PLANS. TRAFFIC SHALL BE DETOURED BY THE USE OF BARRELS AND TYPE 3 BARRICADES AS DESCRIBED BELOW.

THE ENTRANCE RAMP FROM SOUTHBOUND SR 682 TO EASTBOUND US 32/50 SHALL BE CLOSED. SOUTHBOUND SR 682 TRAFFIC SHALL BE SHIFTED TO THE RIGHT LANE AS SHOWN IN STANDARD DRAWING MT-99.50 EXCEPT THAT THE APPROACH SIGNS ON THE MEDIAN BARRIER SIDE, THE CONCRETE BARRIER, AND THE RIGHT SIDE WORK ZONE EDGE LINE SHOWN ARE NOT REQUIRED.

THE EXIT RAMP FROM EASTBOUND US 32/50 TO NORTHBOUND SR 682 SHALL BE CLOSED. RIGHT LANE TRAFFIC SHALL BE SHIFTED TO THE LEFT TWO THROUGH LANES AS SHOWN IN STANDARD DRAWING MT-95.31 EXCEPT THAT THE TRUCK MOUNTED ATTENUATOR SHALL NOT BE REQUIRED AND THE EXIT RAMP SHALL BE CLOSED AS SHOWN IN STANDARD DRAWING 98.29. ADDITIONALLY, THE SIGNAGE SHOWN FOR THE OPPOSING TRAFFIC ON MT-95.31 IS NOT REQUIRED.

DURATION OF LANE CLOSURES AND RESTRICTIONS SHALL BE AT THE APPROVAL OF THE ENGINEER. IT IS THE INTENT TO MINIMIZE THE IMPACT TO THE TRAVELING PUBLIC. LANE CLOSURES OR RESTRICTIONS OVER SEGMENTS OF THE PROJECT IN WHICH NO WORK IS ANTICIPATED WITHIN A REASONABLE TIME FRAME, AS DETERMINED BY THE ENGINEER, SHALL NOT BE PERMITTED. THE LEVEL OF UTILIZATION OF MAINTENANCE OF TRAFFIC DEVICES SHALL BE COMMENSURATE WITH THE WORK IN PROGRESS.

ANY TEMPORARY OR PERMANENT PAVEMENT MARKING WHICH CONFLICTS WITH THE PAVEMENT MARKING FOR THE CLOSURE SHALL BE REMOVED. THE PRICE FOR REMOVAL AND SUBSEQUENT REPLACEMENT SHALL BE INCLUDED IN THE LUMP SUM FOR ITEM 614, MAINTAINING TRAFFIC.

WHEN REFLECTORIZED SURFACES SUCH AS DRUMS, SIGNS, OBJECT MARKERS, AND BARRIER REFLECTORS BECOME COVERED WITH DUST OR MUD, THE CONTRACTOR SHALL CLEAN THOSE SURFACES. PAYMENT SHALL BE INCLUDED IN THE LUMP SUM FOR ITEM 614, MAINTAINING TRAFFIC.

FLAGGING OPERATIONS SHALL BE AS PER STANDARD DRAWING MT-97.10.

THE CONTRACTOR SHALL NOTIFY THE DISTRICT CONSTRUCTION ENGINEER IN WRITING AT LEAST 3 DAYS IN ADVANCE OF ANY LANE WIDTH REDUCTION OR CLOSURE.

PRIOR TO THE BEGINNING OF ANY CONSTRUCTION THAT WILL REQUIRE THE CLOSURE OF EXISTING LANES TO TRAFFIC, ALL WORK ZONE SIGNS, TYPE 3 BARRICADE, AND REMOVAL OF PAVEMENT MARKINGS SHALL BE COMPLETED AS SHOWN ON STANDARD CONSTRUCTION DRAWING MT-101.60 AND THESE PLANS.

BARRICADE INSTALLATION SHALL BE ACCOMPLISHED IN ONE DAY, WITH FLAGGERS BEING UTILIZED FOR THE PROTECTION OF VEHICULAR TRAFFIC DURING THE INSTALLATION.

ALL WORK AND TRAFFIC CONTROL DEVICES SHALL BE IN ACCORDANCE WITH 614 AND OTHER APPLICABLE PORTIONS OF THE SPECIFICATIONS, AS WELL AS THE OHIO MANUAL OF UNIFORM TRAFFIC CONTROL DEVICES. PAYMENT FOR ALL LABOR, EQUIPMENT AND MATERIALS SHALL BE INCLUDED IN THE LUMP SUM CONTRACT PRICE FOR 614, MAINTAINING TRAFFIC, UNLESS SEPARATELY ITEMIZED IN THE PLAN.

ALL DEVIATIONS FROM THE MAINTENANCE OF TRAFFIC PLAN MUST BE APPROVED BY THE ENGINEER.

## ITEM 626 - BARRIER REFLECTOR

*STA. 27+65 TO 31+04 = 339 FT*
*(339 FT / 80 + 1) X 4 = 20 EA*

*A TOTAL OF 20 EA CARRIED TO THE GENERAL SUMMARY*

## ITEM 642 - EDGE LINE, 4"

*STA. 27+65 TO 31+04 = 339 FT X 4 = 1356A*
*1356 / 5280 = 0.26 MI*

*0.13 MI = WHITE*
*0.13 MI = YELLOW*

*TOTAL OF 0.26 MI CARRIED TO THE GENERAL SUMMARY*

## CRITICAL WORK

*ALL WORK SHALL BE COMPLETED, ALL MAINTENANCE OF TRAFFIC ITEMS REMOVED, AND ALL TRAFFIC CONTROL ITEMS RE-ESTABLISHED.*

## INCENTIVE / DISINCENTIVE TABLE

| DESCRIPTION OF CRITICAL WORK | COMPLETION DATE OF CRITICAL WORK | TIME PERIOD | DISINCENTIVE $ PER DAY PAST COMPLETION DATE OF CRITICAL WORK | INCENTIVE $ PER DAY PRIOR TO COMPLETION DATE OF CRITICAL WORK | MAXIMUM INCENTIVE IF CRITICAL WORK COMPLETED ON OR BEFORE 8-13-2016 |
|---|---|---|---|---|---|
| ALL WORK STATED IN CRITICAL WORK NOTE THIS SHEET | 8-18-2016 | DAY | $3,000 | $3,000 | $15,000 |

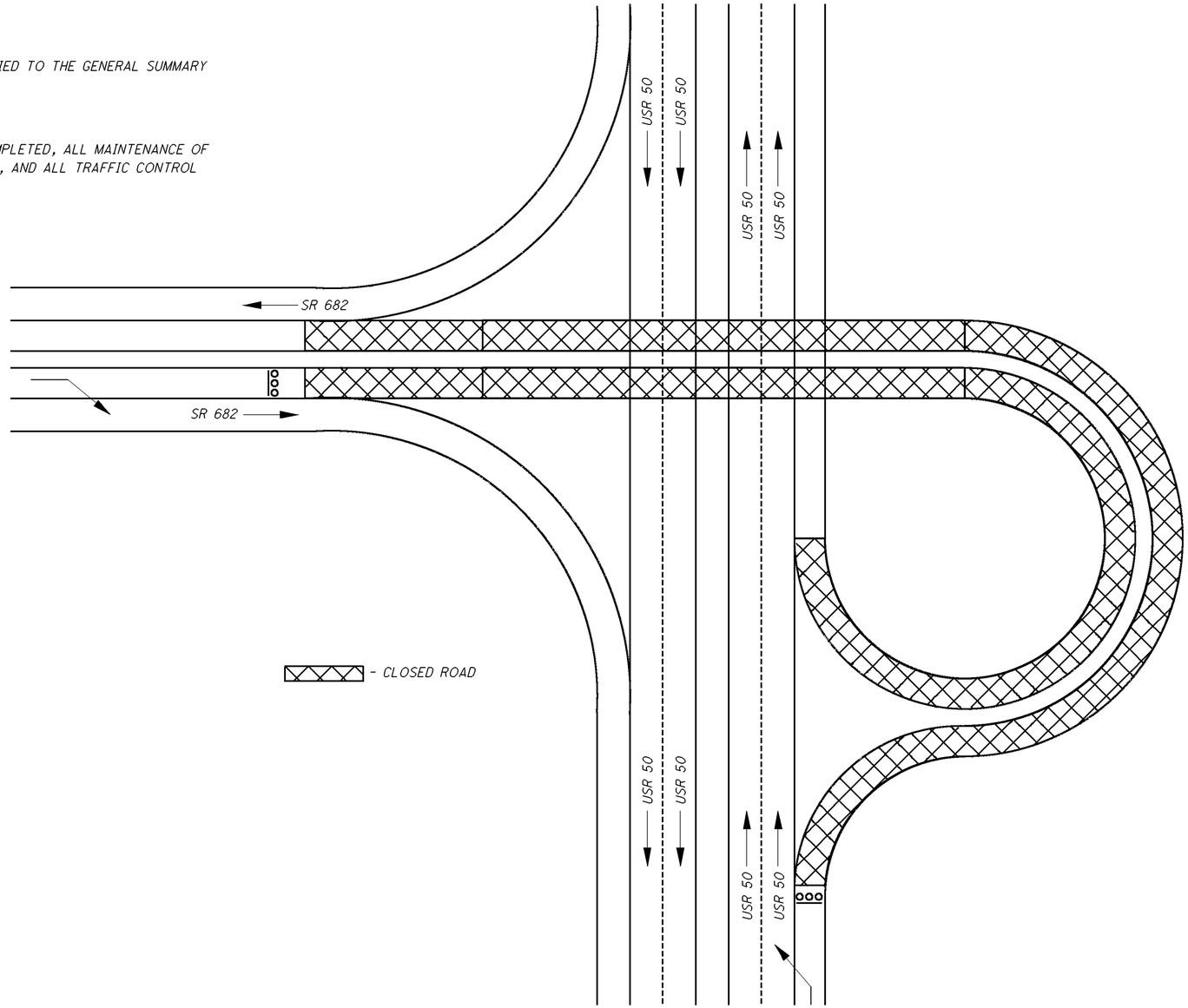


**CLOSURE TRAFFIC DIAGRAM**

*DIAGRAM DOES NOT SHOW ALL MAINTENANCE OF TRAFFIC ITEMS REQUIRED.*

CALCULATED WAB
CHECKED JDC

GENERAL NOTES & CALCULATIONS

ATH-682-0.04



I:\project\ATH-682-00.04-PID-101875\DGN\STRNOTES.dgn 19-APR-2016 11:06AM wbuckle1

| SHEET NUMBER | | | | | | | | | | | PARTICIPATION | ITEM | ITEM EXT. | GRAND TOTAL | UNIT | DESCRIPTION | SEE SHEET NO. |
|---|---|---|---|---|---|---|---|---|---|---|---|---|---|---|---|---|---|
| | | | | | | | | | 3 | 8 | 01/BRO/BR | | | | | | |
| | | | | | | | | | | | | | | | | EROSION CONTROL | |
| | | | | | | | | | | | 1000 | 832 | 30000 | 500 | EA | EROSION CONTROL | |
| | | | | | | | | | | | | | | | | TRAFFIC CONTROL | |
| | | | | | | | | | 5 | | 5 | 621 | 54000 | 5 | EA | RAISED PAVEMENT MARKER REMOVED | |
| | | | | | | | | | 20 | | 20 | 626 | 00100 | 20 | EA | BARRIER REFLECTOR | |
| | | | | | | | | | 0.26 | | 0.26 | 642 | 00090 | 0.26 | MI | EDGE LINE, 4" | |
| | | | | | | | | | | | | | | | | FOR STRUCTURE QUANTITIES SEE SHEET 5 OF 7 | |
| | | | | | | | | | | | | | | | | INCIDENTALS | |
| | | | | | | | | | LUMP | | LUMP | 614 | 11000 | LUMP | | MAINTAINING TRAFFIC | |
| | | | | | | | | | LUMP | | LUMP | 624 | 10000 | LUMP | | MOBILIZATION | |

CALCULATED WAB
CHECKED JDC

GENERAL SUMMARY

ATH-682-0.04

3
7

I:\project\ATH-682-00.04-PID-101875\DGN\STRNOTES.dgn 19-APR-2016 10:51AM wbuckle1

LIMITS OF LMC OVERLAY = 319'

BEGIN WORK
STATION 27+75

END APPROACH SLAB
STA. 28+12.10

℄ BRG REAR ABUT
STA. 28+14.36

℄ BRG PIER 1
STA. 28+62.36

℄ BRG PIER 2
STA. 29+22.36

℄ BRG PIER 3
STA. 30+00.36

℄ BRG FWD ABUT
STA. 30+54.86

BEGIN APPROACH SLAB
STA. 30+57.12

3'±
16'±
6'-3"±
S 25° 22' 40" E
6'-3"±
16'±
3'±

29'-9"±
62'-6"± TOE/TOE PARAPET
29'-9"±

12' TYP.
25' TYP.

670
669
668
667

27
28
29
30
31
℄ SR 682
32

END WORK
STATION 30+94

TS Sta. 31+64.11

EASTBOUND USR 33
WESTBOUND USR 33

8'-0"±
24'±
4'-0"±
4'-0"±
24'±
8'-0"±

ST Sta. 43+07.76
43

- LATEX MODIFIED CONCRETE(LMC) OVERLAY AREA, 3 1/4" DEPTH
- VARIABLE DEPTH PLANNING AND OVERLAY, 1 1/2" MIN. DEPTH LMC
- EXISTING PRESSURE RELIEF JOINT, TO REMAIN

## EXISTING STRUCTURE

TYPE: CONTINUOUS STEEL BEAM BRIDGE WITH REINFORCED CONCRETE SUBSTRUCTURE

SPANS: 48'-0" - 60'-0" - 78'-0" - 54'-6" C/C BRGS.

ROADWAY: 62'-6" TOE/TOE PARAPET

LOADING: HS20-44

SKEW: 5°57'49" RF

APPROACH SLABS: AS-1-72 (25' LONG)

ALIGNMENT: TANGENT

CROWN: 0.016

STRUCTURAL FILE NUMBER: 0500925

DATE BUILT: 1978

I:\project\ATH-682-00.04-PID-101875\DGN\site.dgn 19-APR-2016 10:48AM wbuckle1

DESIGN AGENCY
OHIO DEPARTMENT OF TRANSPORTATION
DISTRICT 10 - PLANNING AND ENGINEERING
MARIETTA, OHIO

| DESIGNED | DRAWN | REVIEWED | DATE |
|---|---|---|---|
| WAB | WAB | | |
| CHECKED | REVISED | STRUCTURE FILE NUMBER | |
| JDC | | 0500925 | |

ATHENS COUNTY
STA. 28+12.10
STA. 30+57.12

**SITE PLAN**
BRIDGE No. ATH-682-0004
OVER USR 33

**ATH-682-0.04**
**PID No. 101875**

1 / 4

4 / 7

## PROPOSED WORK

THE PROPOSED WORK INCLUDES REMOVING AN EXISTING ASPHALT OVERLAY AND PLACING A NEW LATEX MODIFIED CONCRETE OVERLAY.

## REFERENCE SHALL BE MADE TO STANDARD DRAWINGS:

REFERENCE SHALL BE MADE TO THE SUPPLEMENTAL SPECIFICATIONS:

| | |
|---|---|
| 800 | DATED 4-15-16 |
| 832 | DATED 1-17-14 |

## EXISTING STRUCTURE VERIFICATION

DETAILS AND DIMENSIONS SHOWN ON THESE PLANS PERTAINING TO THE EXISTING STRUCTURE HAVE BEEN OBTAINED FROM PLANS OF THE EXISTING STRUCTURE AND FROM FIELD OBSERVATIONS AND MEASUREMENTS. CONSEQUENTLY, THEY ARE INDICATIVE OF THE EXISTING STRUCTURE AND THE PROPOSED WORK BUT THEY SHALL BE CONSIDERED TENTATIVE AND APPROXIMATE. THE CONTRACTOR IS REFERRED TO CMS SECTIONS 102.05 AND 105.02.

CONTRACT BID PRICES SHALL BE BASED UPON A RECOGNITION OF THE UNCERTAINTIES DESCRIBED ABOVE AND UPON A PREBID EXAMINATION OF THE EXISTING STRUCTURE BY THE CONTRACTOR, HOWEVER, ALL PROJECT WORK SHALL BE BASED UPON ACTUAL DETAILS AND DIMENSIONS WHICH HAVE BEEN VERIFIED BY THE CONTRACTOR IN THE FIELD.

## ITEM 509 - REINFORCING STEEL, REPLACEMENT OF EXISTING REINFORCING STEEL, AS PER PLAN

ITEM 509 REINFORCING STEEL, REPLACEMENT OF EXISTING REINFORCING STEEL, AS PER PLAN: REPLACE ALL EXISTING REINFORCING BARS DEEMED BY THE ENGINEER TO BE UNUSABLE BECAUSE OF CORROSION. THE DEPARTMENT WILL MEASURE THE REPLACEMENT REINFORCING STEEL BY THE NUMBER OF POUNDS ACCEPTED IN PLACE.

REPLACE ALL EXISTING REINFORCING STEEL BARS WHICH ARE TO BE INCORPORATED INTO THE NEW WORK AND ARE DEEMED BY THE ENGINEER TO BE MADE UNUSABLE BY CONCRETE REMOVAL OPERATIONS WITH NEW EPOXY COATED REINFORCING STEEL OF THE SAME SIZE AT NO COST TO THE DEPARTMENT.

THE FOLLOWING CONTINGENCY QUANTITY HAS BEEN INCLUDED IN THE STRUCTURE ESTIMATED QUANTIES TO BE USED AS DIRECTED BY THE ENGINEER.

ITEM 509 - REINFORCING STEEL, REPLACEMENT OF EXISTING REINFORCING STEEL, AS PER PLAN, 50 POUNDS

## SEALING WITH HMWM RESIN

AFTER DECK SLAB CONCRETE HAS BEEN DRY-AIR CURED FOR NOT LESS THAN 7 DAYS, AND IMMEDIATELY AFTER A MINIMUM 48 HOUR PERIOD WITHOUT PRECIPITATION, VERTICAL CONSTRUCTION JOINTS IN THE DECK SLAB, HORIZONTAL JOINTS AT AND ADJACENT TO THE ROADWAY SURFACE (AT THE BASE OF SIDEWALKS, CURBS, BARRIERS, ETC.), AND CRACKS IN THE ROADWAY SURFACE THAT ARE VISIBLE TO THE UNAIDED EYE, SHALL BE SEALED WITH A HIGH MOLECULAR WEIGHT METHACRYLATE (HMWM) RESIN AS DESCRIBED IN THE CURRENT CONSTRUCTION AND MATERIAL SPECIFICATIONS. SEALANT SHALL BE APPLIED BY BRUSH, SPRAY OR OTHER SUITABLE APPLICATION ALONG THE SURFACE OF JOINTS AND CRACKS. IF NECESSARY, MULTIPLE APPLICATIONS SHALL BE MADE UNTIL COMPLETE PENETRATION HAS BEEN ACHIEVED. AFTER SEALANT HAS BEEN CURED, IT SHALL BE SANDED AS SPECIFIED TO ROUGHEN THE SEALANT SURFACE AND RESTORE ITS SUITABILITY FOR VEHICULAR TRAFFIC. FOR OVERCOATING WITH A CONCRETE SURFACE SEALANT OR AS PREPARATION FOR A CONCRETE OVERLAY, TREATED SURFACES SHALL BE ROUGHENED BY ABRASIVE BLASTING AND OTHERWISE CLEANED AS SPECIFIED FOR THE SUBSEQUENT APPLICATION. SEALING CONSTRUCTION JOINTS AND CRACKS AS DESCRIBED ABOVE SHALL BE INCLUDED WITH THE DECK SLAB CONCRETE FOR PAYMENT.

## ITEM 847 - LATEX MODIFIED CONCRETE OVERLAY (3¼")

2 X 245' X 29.75' / 9 = 1619.72 SY
2 X 25' X 22.25' / 9 X 2 = 247.22 SY

A TOTAL OF 1867 SY CARRIED TO THE ESTIMATED QUANTITIES

## ITEM 847 - EXISTING ASPHALT REMOVED (3" NOMINAL THICKNESS)

2 X (245' X 29.75' / 9) = 1619.72 SY
2 X (25' X 22.25' / 9 X 2) = 247.22 SY
VARIES FORM 0"± TO 3 1/4"±
2 X (12' X 22.25' / 9 X 2) = 118.67 SY

A TOTAL OF 1986 SY CARRIED TO THE ESTIMATED QUANTITIES

## ITEM 847 - LATEX MODIFIED CONCRETE OVERLAY (VARIABLE THICKNESS), MATERIAL ONLY

USE ADDITIONAL 3" THICKNESS, 1986 SY x 10% = 198.6 SY
(198.6 SY X 3/12)/3 = 16.55 CY
TOTAL = 16.55 CY

A TOTAL OF 16.6 CY CARRIED TO THE ESTIMATED QUANTITIES

## ITEM 847 - FULL DEPTH REPAIR

USE ADDITIONAL 8" THICK, 1986 Sq. Yds. x 1% = 19.86 SY
(19.86 SY X 8/12)/3 = 4.42 CY
TOTAL = 4.5 CY

A TOTAL OF 4.5 CY CARRIED TO THE ESTIMATED QUANTITIES

## ITEM 847 - HAND CHIPPING

1986 SY x 10% = 198.6 SY
TOTAL = 199 SQ. YDS.

A TOTAL OF 199 SY CARRIED TO THE ESTIMATED QUANTITIES

## ITEM 516 - JOINT SEALER

REAR ABUTMENT
2 X 29.917' = 59.83 FT
FORWARD ABUTMENT
2 X 29.917' = 59.83 FT

A TOTAL OF 120 FT CARRIED TO THE ESTIMATED QUANTITIES

**ESTIMATED QUANTITIES (ATH-682-0004)**

| PARTICIPATION 01/BRO/BR | ITEM | ITEM EXT. | GRAND TOTAL | UNIT | DESCRIPTION | ABUT. | PIER | SUPER. | GRNL |
|---|---|---|---|---|---|---|---|---|---|
| 50 | 509 | 20001 | 50 | LB | REINFORCING STEEL, REPLACEMENT OF REINFORCING STEEL, AS PER PLAN | | | 50 | |
| 120 | 516 | 31000 | 120 | FT | JOINT SEALER | | | 120 | |
| 1867 | 847 | 10100 | 1867 | SY | LATEX MODIFIED CONCRETE OVERLAY, ( 3¼" Thick ) | | | 1867 | |
| 16.6 | 847 | 20100 | 16.6 | CY | LATEX MODIFIED CONCRETE OVERLAY (VARIABLE THICKNESS), MATERIAL ONLY | | | | 16.6 |
| LUMP | 847 | 30000 | LUMP | | TEST SLAB | | | LUMP | |
| 4.5 | 847 | 30200 | 4.5 | CY | FULL DEPTH REPAIR | | | 4.5 | |
| 1986 | 847 | 30300 | 1986 | SY | WEARING COURSE REMOVED, ASPHALT (3" NOMINAL THICKNESS) | | | 1986 | |
| 199 | 847 | 50000 | 199 | SY | HAND CHIPPING | | | 199 | |

DESIGN AGENCY
OHIO DEPARTMENT OF TRANSPORTATION
DISTRICT 10 - PLANNING AND ENGINEERING
MARIETTA, OHIO

| DESIGNED | DRAWN | REVIEWED | DATE |
|---|---|---|---|
| WAB | WAB | - | - |
| CHECKED | REVISED | STRUCTURE FILE NUMBER | |
| JDC | | 0500925 | |

STRUCTURE NOTES AND QUANTITIES
BRIDGE No. ATH-682-0004
OVER USR 33

ATH-682-0.04
PID No. 101875

2 / 4

5 / 7

I:\project\ATH-682-00.04-PID-101875\DGN\STRNOTES.dgn 19-APR-2016 10:50AM wbuckle1

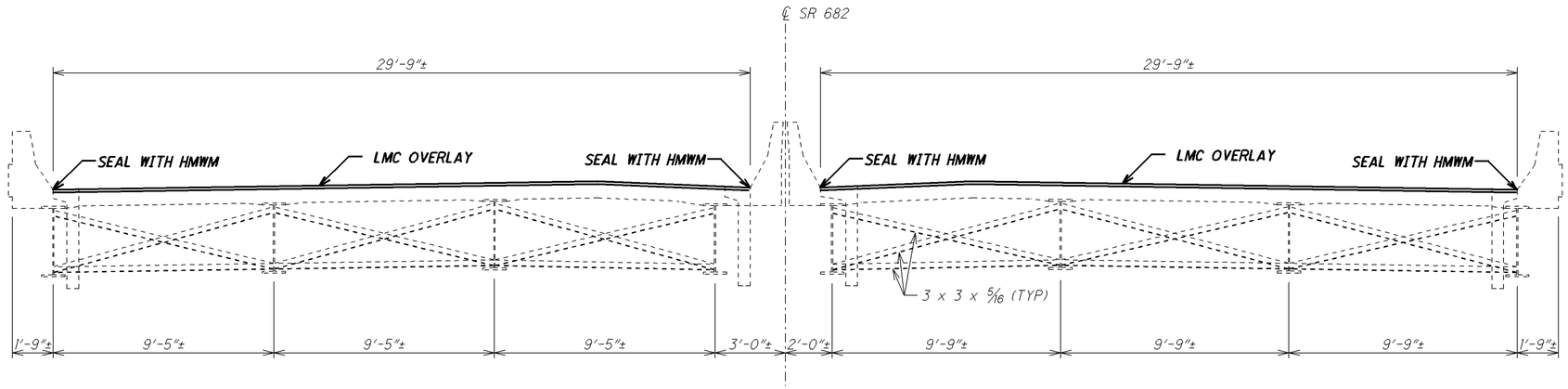


## TRANSVERSE SECTION

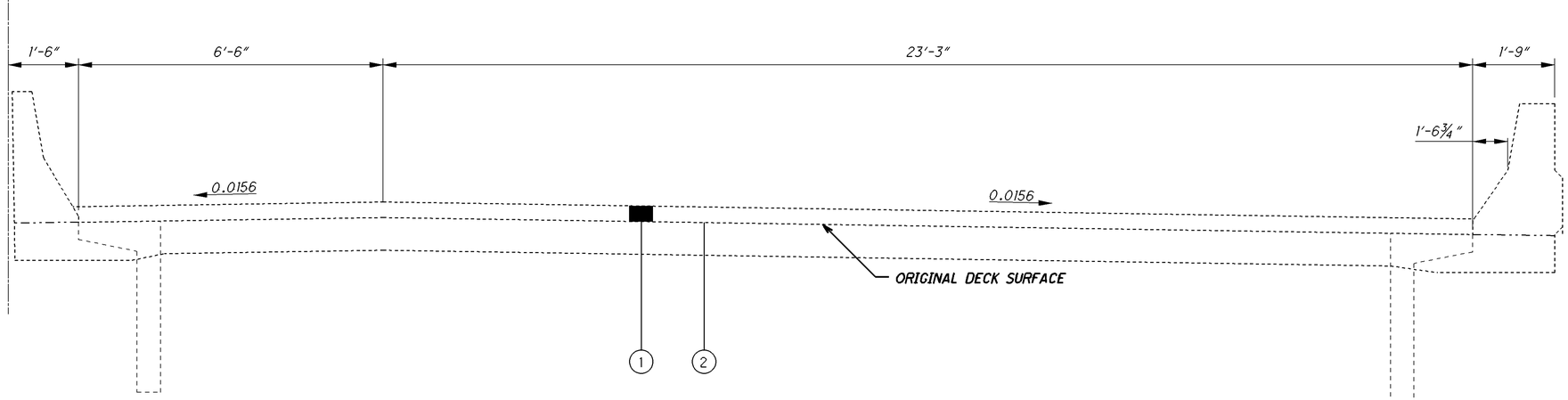


## OVERLAY DETAIL

*(RIGHT BRIDGE SHOWN, LEFT BRIDGE OPPOSITE HAND)*

LEGEND

1. *ITEM 847 - WEARING COURSE REMOVED, ASPHALT CONCRETE*
2. *EXISTING SPRAY APPLIED WATERPROOFING MEMBRANE SYSTEM TO BE REMOVED*

DESIGN AGENCY
OHIO DEPARTMENT OF TRANSPORTATION
DISTRICT 10 - PLANNING AND ENGINEERING
MARIETTA, OHIO

| DESIGNED | DRAWN | REVIEWED | DATE |
|---|---|---|---|
| WAB | WAB | | |
| CHECKED | REVISED | STRUCTURE FILE NUMBER | |
| JDC | | 0500925 | |

TRANSVERSE SECTION
BRIDGE No. ATH-682-0004
OVER USR 33

ATH-682-0.04
PID No. 101875

3 / 4

6 / 7

I:\project\ATH-682-00.04-PID-101875\DGN\trans.dgn 19-APR-2016 10:52AM wbuckle1

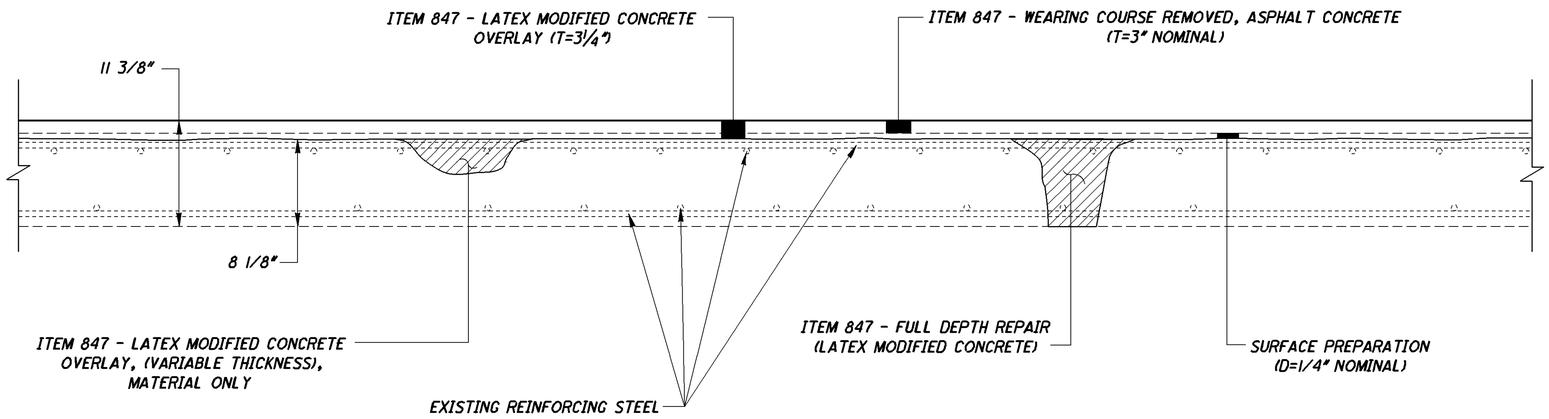


## TYPICAL OVERLAY DETAIL

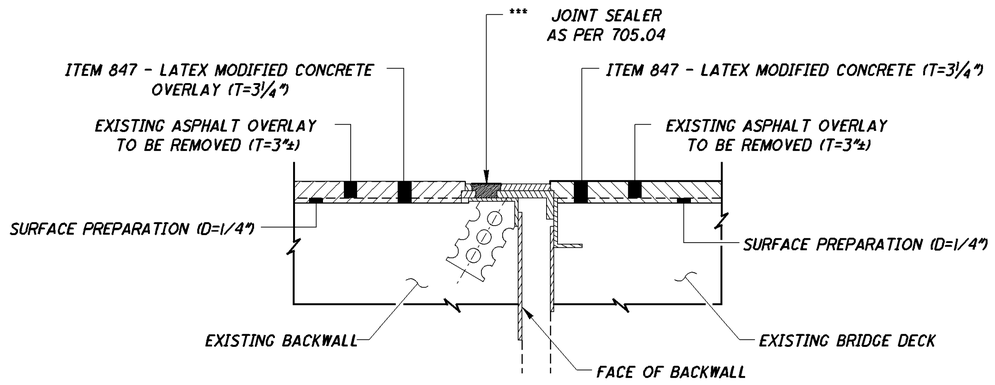


## DETAIL AT JOINT

*** THE COST OF ALL LABOR, TOOLS, MATERIALS, AND INCIDENTALS NECESSARY TO CLEAN THE EXISTING JOINT AND PLACE THE PROPOSED JOINT SEALER SHALL BE INCLUDED WITH THE 516 - JOINT SEALER ITEM.

DESIGN AGENCY
OHIO DEPARTMENT OF TRANSPORTATION
DISTRICT 10 - PLANNING AND ENGINEERING
MARIETTA, OHIO

| DESIGNED | DRAWN | REVIEWED | DATE |
|---|---|---|---|
| WAB | WAB | ---- | ---- |
| CHECKED | REVISED | STRUCTURE FILE NUMBER | |
| JDC | | 0500925 | |

BRIDGE OVERLAY DETAIL
BRIDGE NO, ATH-682-0.04
OVER USR 33

ATH-682-0.04
PID No. 101875

4 / 4

7 / 7

I:\project\ATH-682-00.04-PID-101875\DGN\trans.dgn 19-APR-2016 10:52AM wbuckle1